AML ADVANCED MECHATRONICS LABORATORY

Integration of Mechanical CAD and Behavioral Modeling

Raj Sinha, Chris Paredis, Pradeep Khosla

2000 IEEE/ACM International Workshop on Behavioral Modeling and Simulation

October 19-20, 2000, Orlando, Florida, USA

Institute for Complex Engineered Systems

Electrical & Computer ENGINEERING

Simulation-Based Design

Physical Prototyping

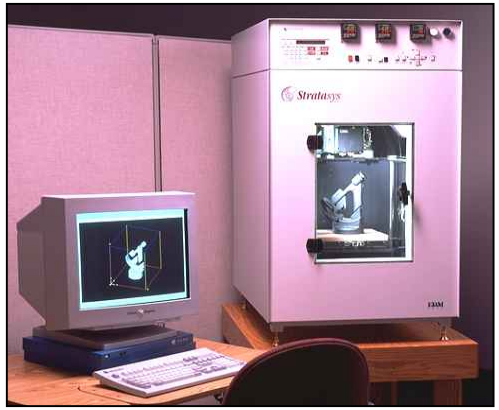

Rapid Prototyping

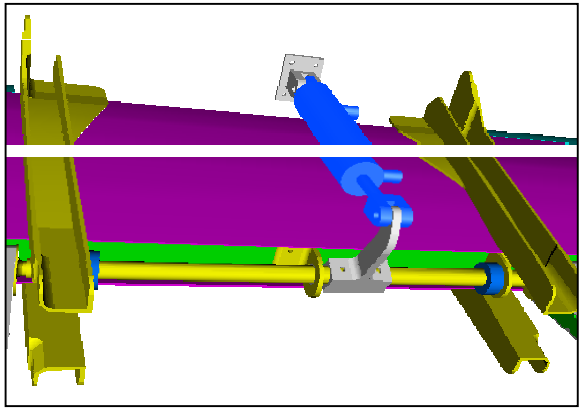

Virtual Prototyping

- Faster and less expensive design verification
- Immediate feedback for designers

Simulation Requirements for Design Environment

- Easy to generate simulation models
  - Facilitate model re-use, evolution of models
  - Composition of models
  - Integrated with design environment
- Multi-disciplinary
  - Mechanical, electrical, hydraulic, signal, …
- Collaborative
  - Design teams in different locations
- Accuracy, validation, …

Outline of Presentation

- Components and Composable Simulations
- Modeling Paradigms
  - Port-based modeling
  - System-Level models
- Integration with CAD
  - Parameter extraction for component models
  - Parameter extraction for interaction models
    - Example – kinematics models

Design as Decomposition & Composition

- Decompose function
- Compose form

- Mechatronic systems:
  - Off-the-shelf components
  - Assemblies
  - Arbitrary rigid bodies
  - …

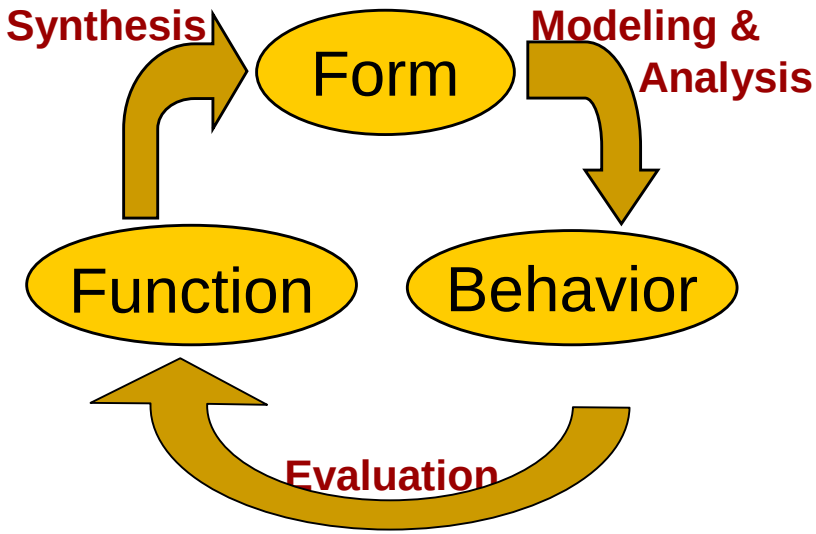

Component Objects: Form + Behavior

- Compose systems Form + Behavior
- System-level model:
  - Component behavior
  - Component interactions

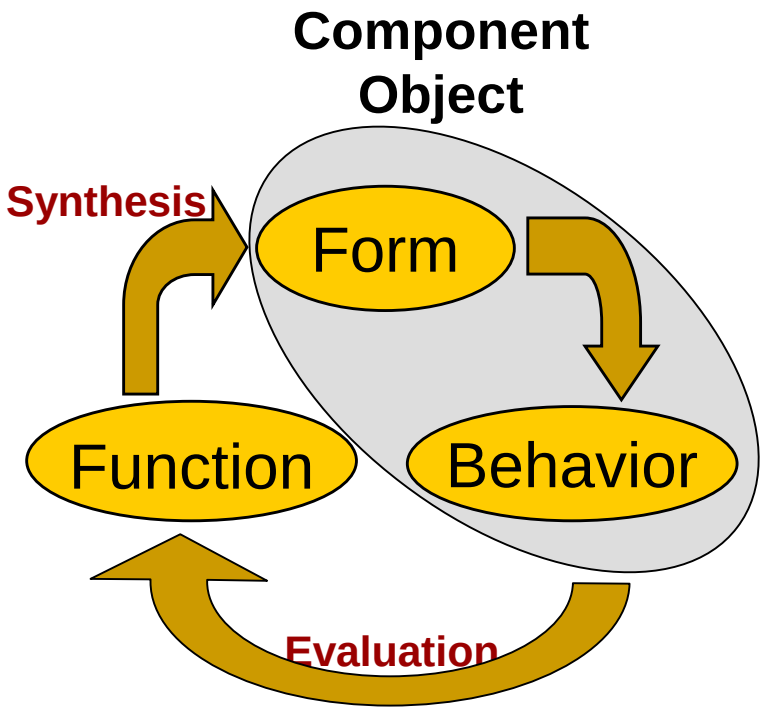

Components and Composable Simulation

Simulation and Design environment for Virtual prototyping

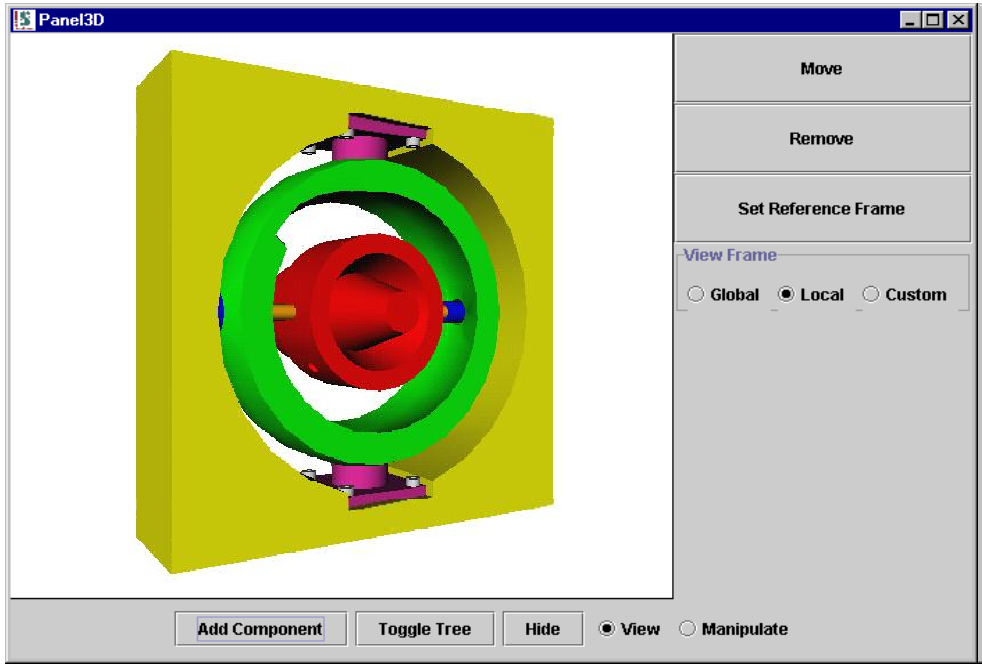

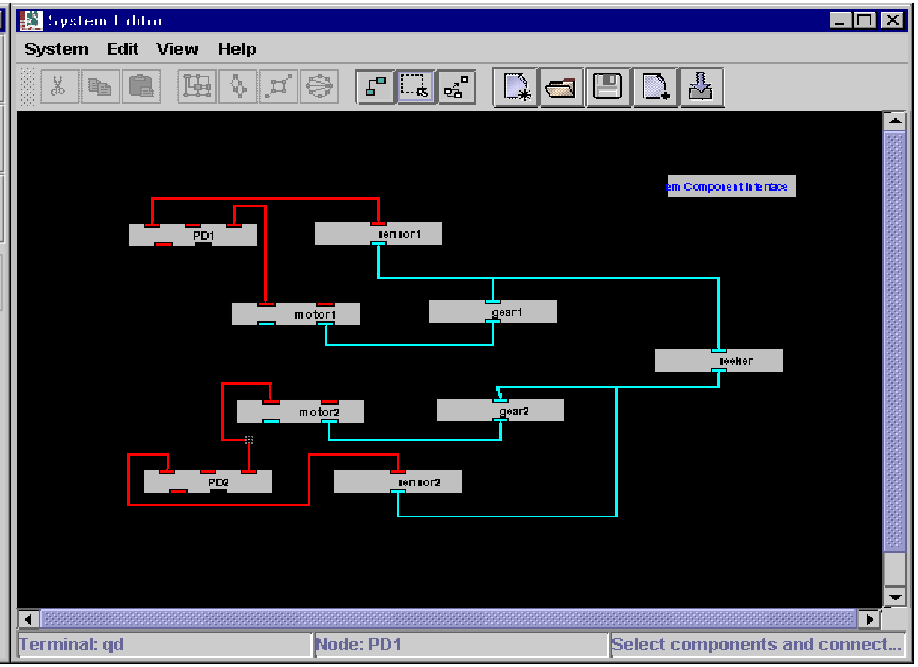

3D CAD Modeling

Behavior Modeling

Model Evaluation

- XML rep. for component objects
- From XML to VHDL-AMS
- Commercial VHDL-AMS solver

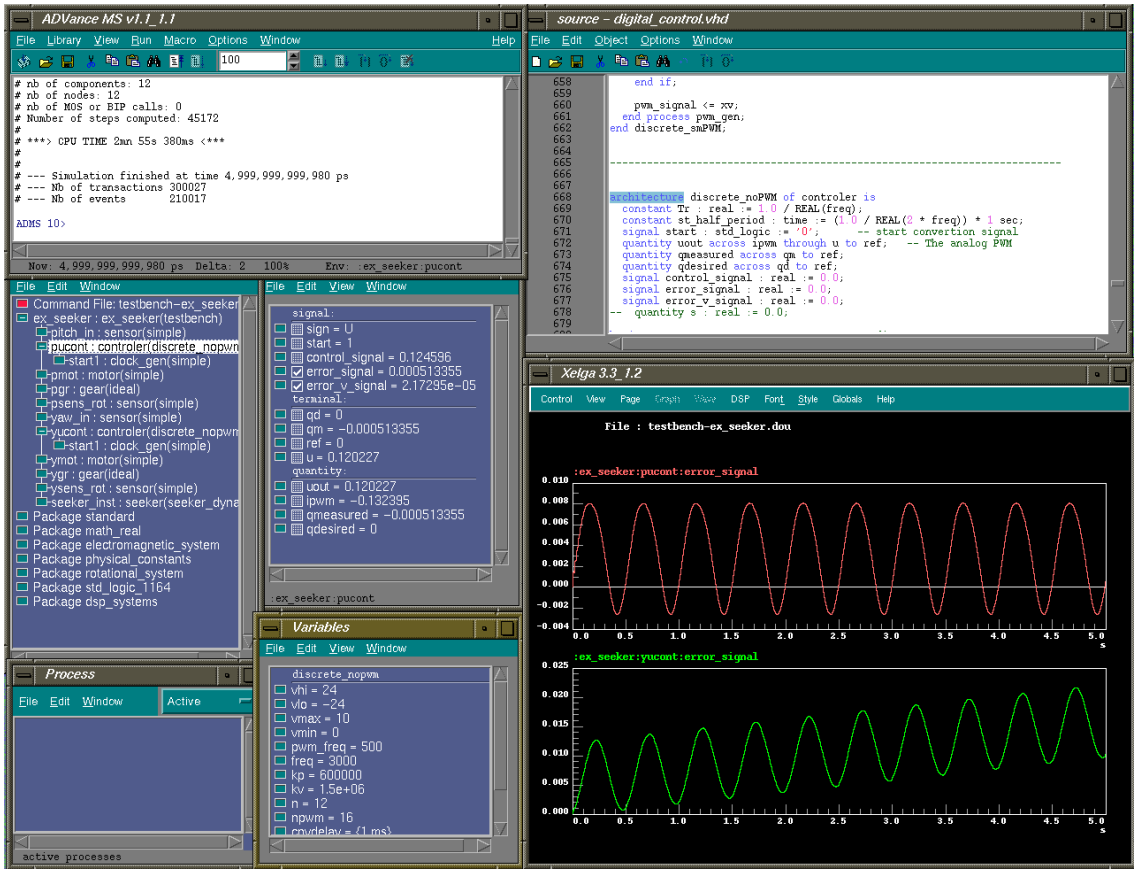

Outline of Presentation

- Components and Composable Simulations
- Modeling Paradigms
  - Port-based modeling
  - System-Level models
- Integration with CAD
  - Parameter extraction for component models
  - Parameter extraction for interaction models
    - Example – kinematics models

Port-Based Modeling

- Ports correspond to physical interfaces
- All interactions through ports
- Across and through variable for each port
- Lumped interactions

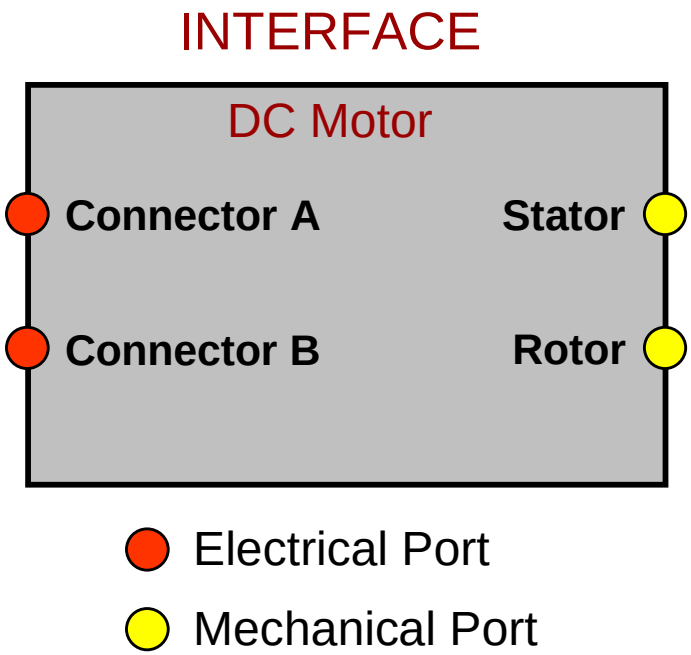

Port-Based Modeling

- Hierarchical
- Equation-based model
- Non-causal connections

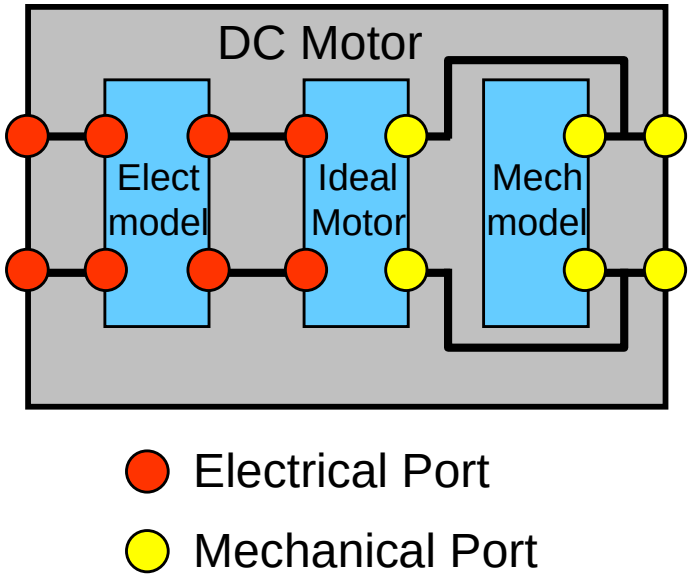

System-Level Models

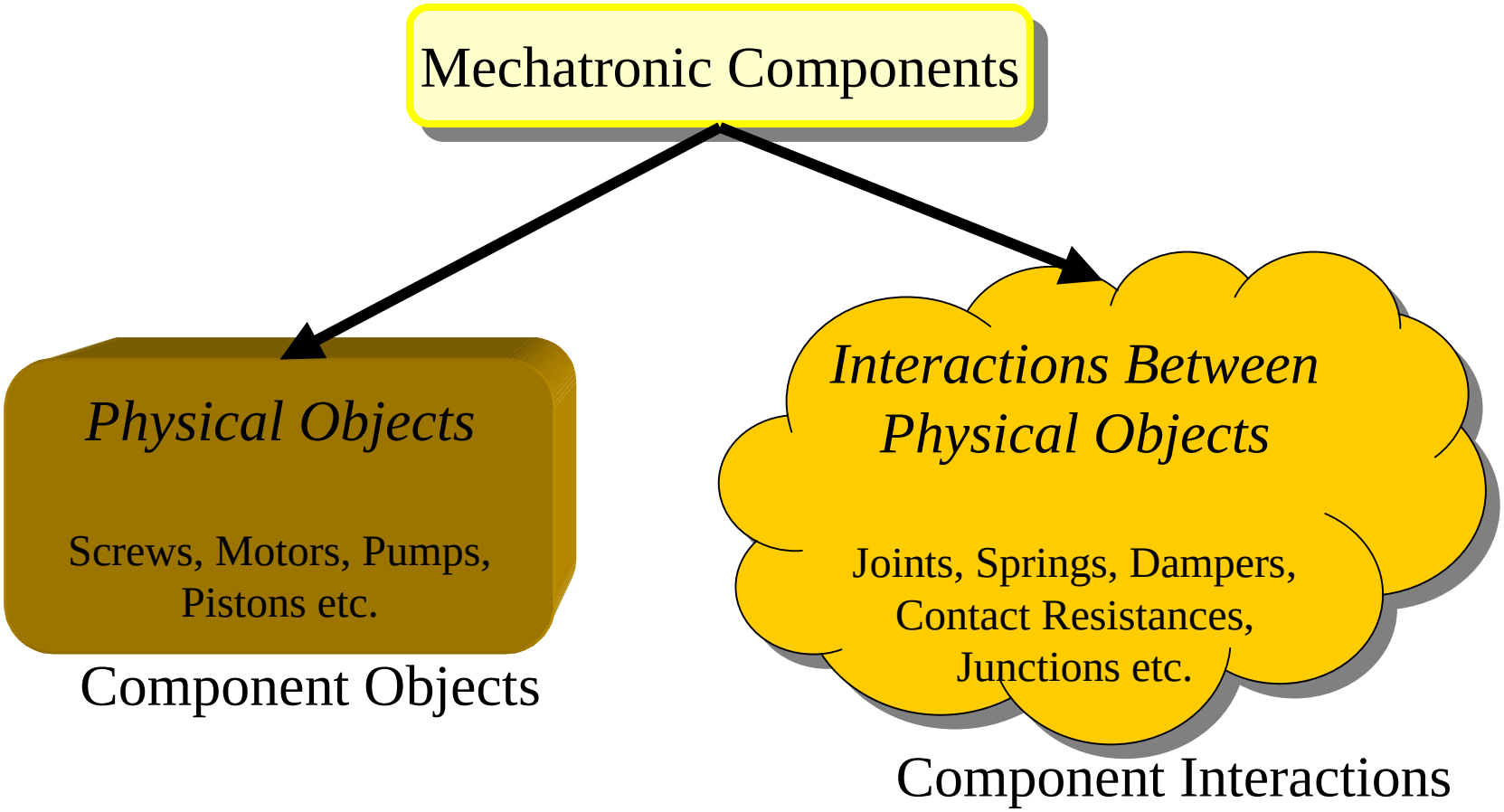

System-Level Models: Component Objects

- Encapsulate both form and behavior
- Behavior is derived from form
  - Procedural derivation
  - Look-up tables

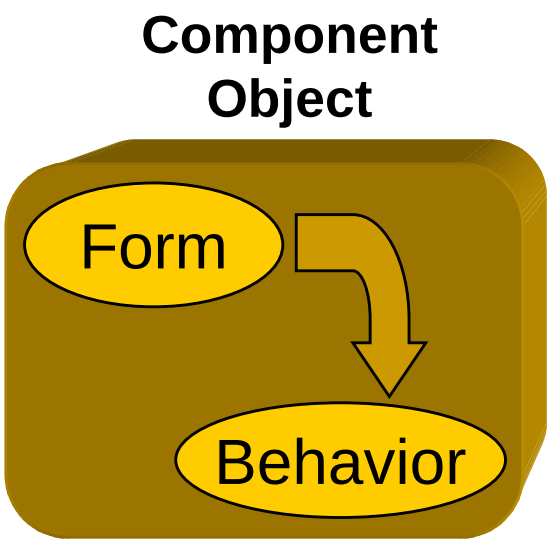

System-Level Models: Component Interactions

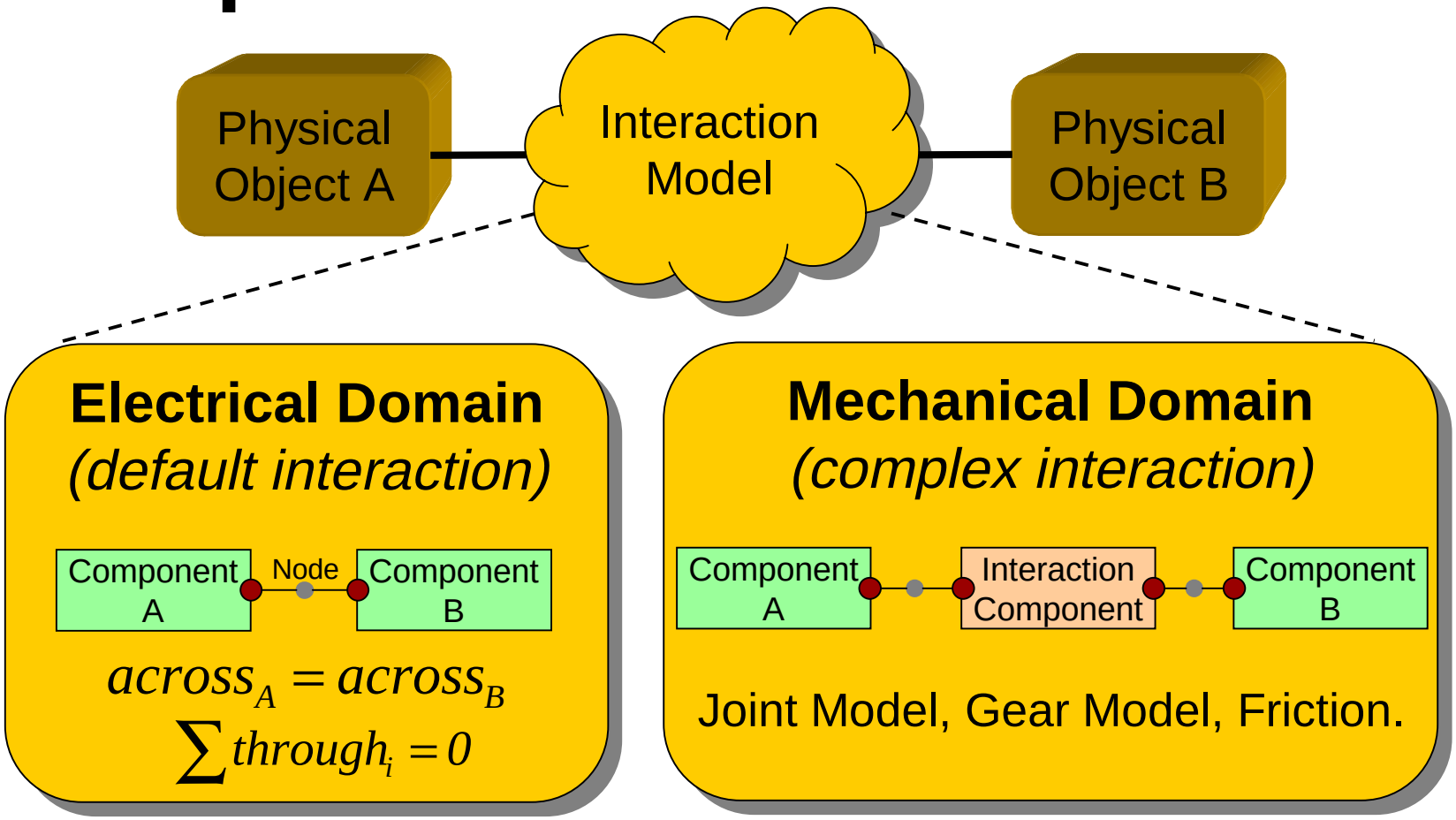

System-Level Models

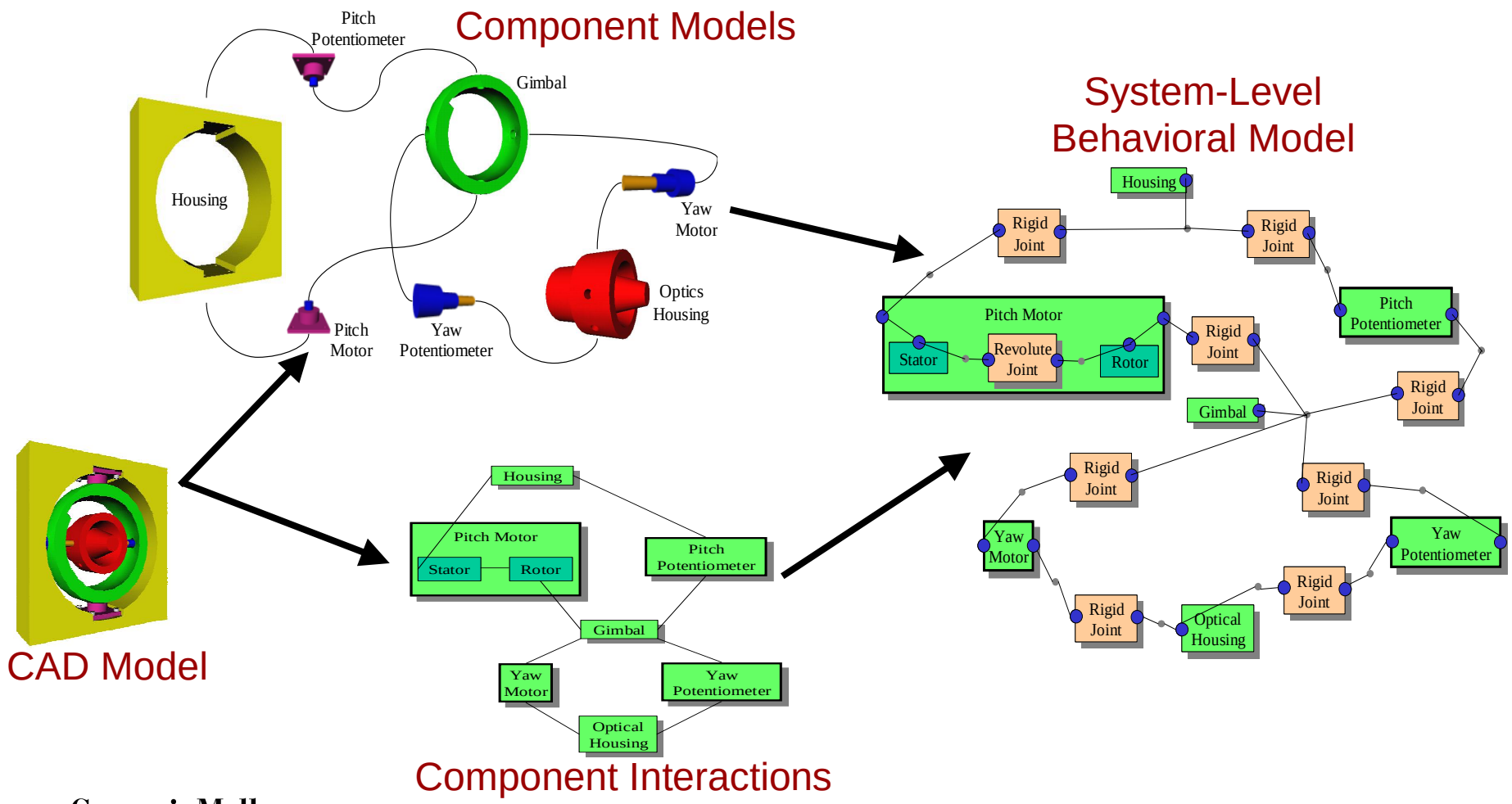

Outline of Presentation

- Components and Composable Simulations
- Modeling Paradigms
  - Port-based modeling
  - System-Level models
- Integration with CAD
  - Extracting component parameters
  - Extracting interaction parameters
    - Example – kinematics models

Interleave Design and Modeling

Component library

Component editor

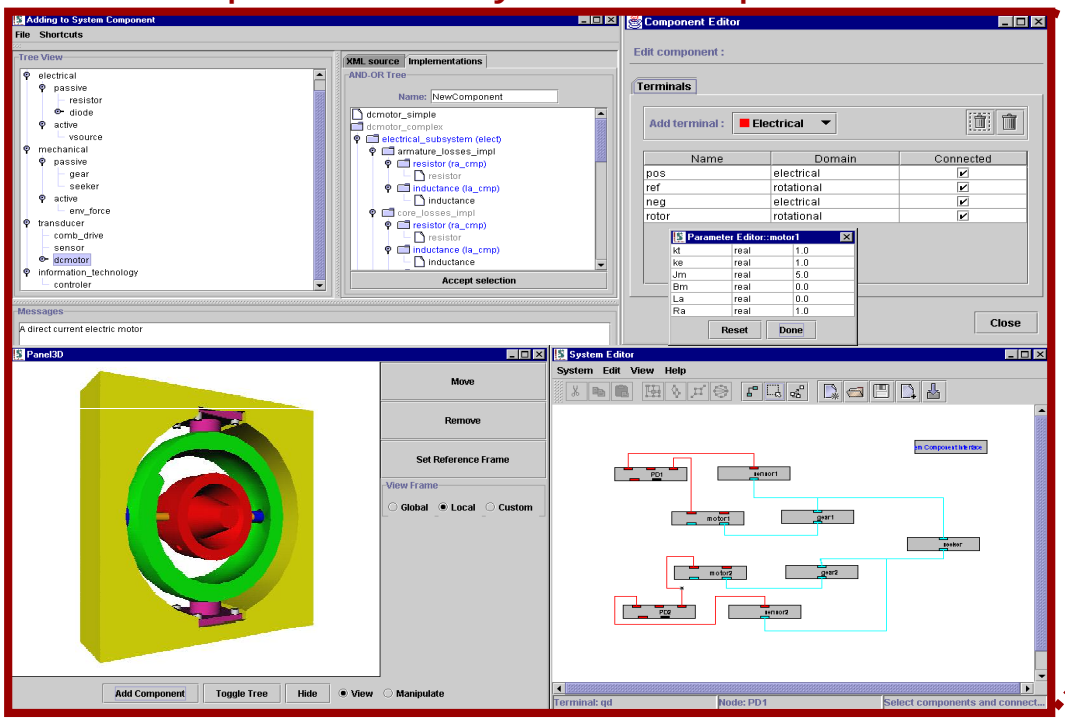

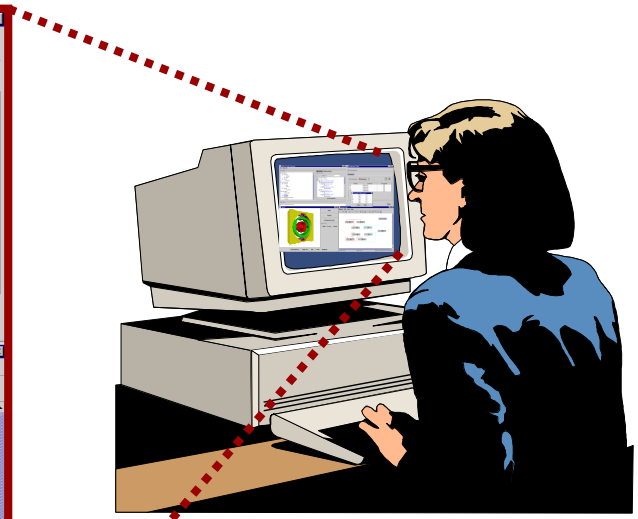

Designer

3D CAD modeling

Behavior Modeling

Extracting Component Parameters

- Parametric CAD models and Parametric behavioral models
- Relate behavioral parameters to CAD parameters

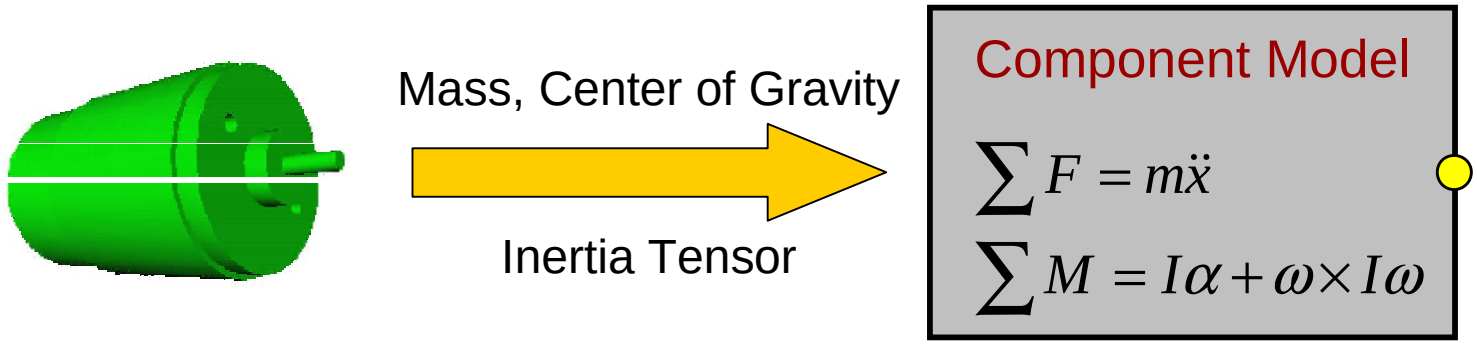

Extracting Component Parameters

- Hydraulic tubing

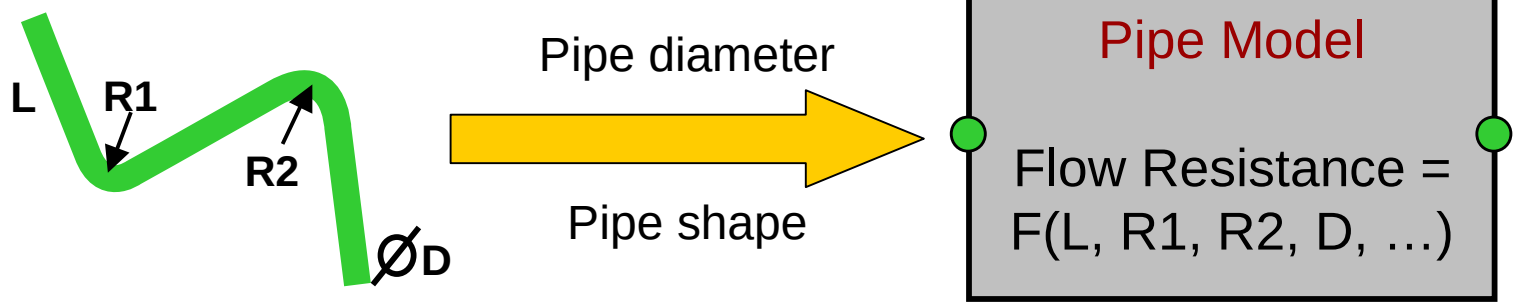

- Family of DC-motors

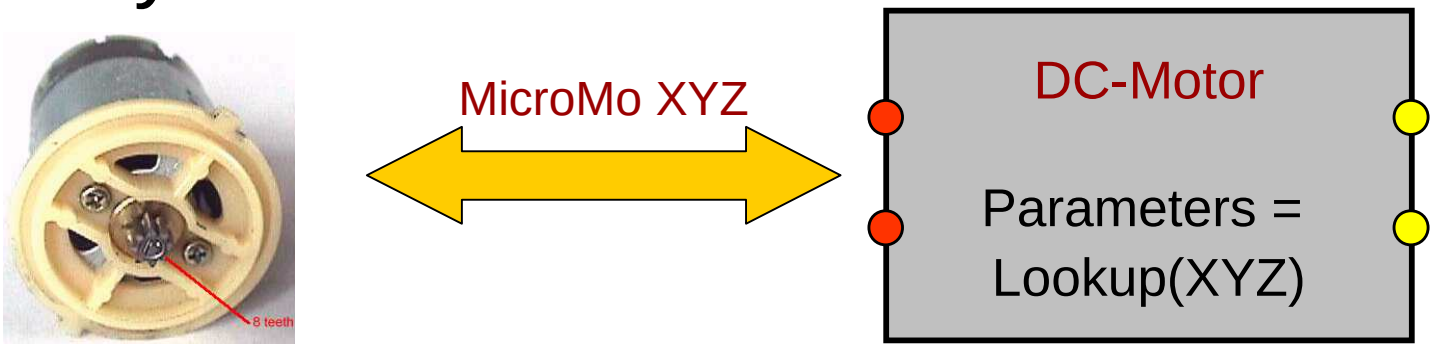

Component Interactions

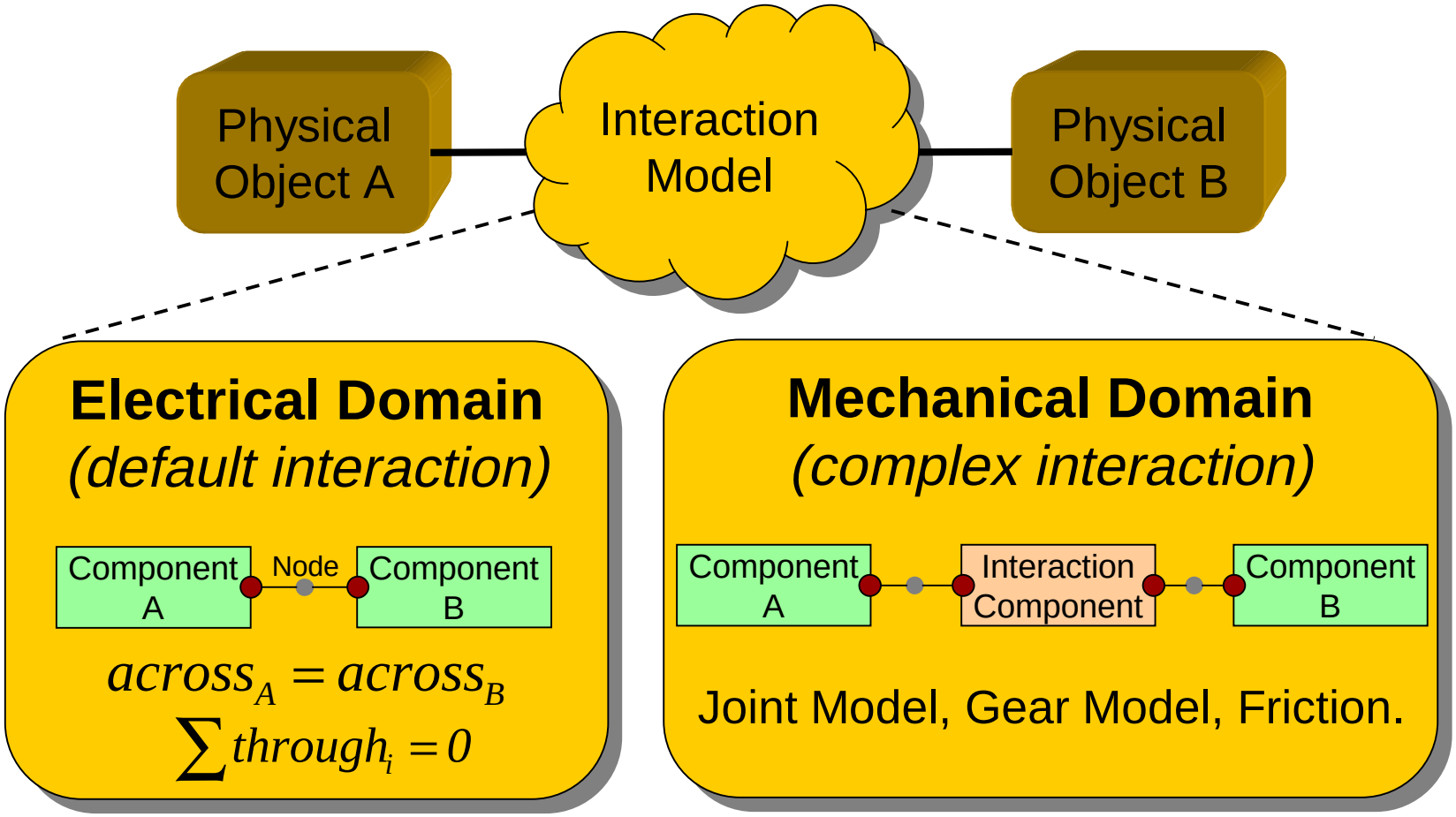

Extracting Interaction Models

- Extracting parameter values

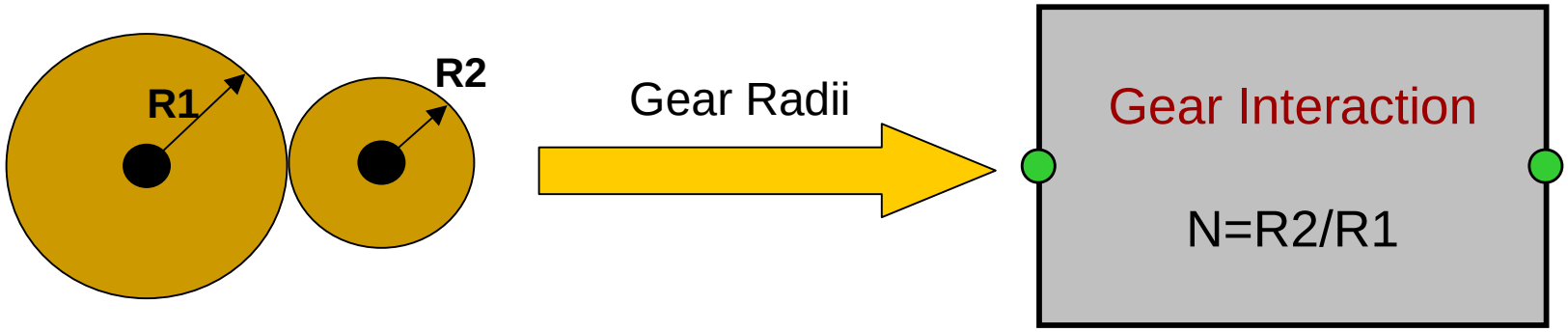

- Extracting interaction type
  - Revolute, prismatic, spherical, …
  - Gear, rack&pinion, rolling, …

Example: Contact-Driven Kinematics Behavior

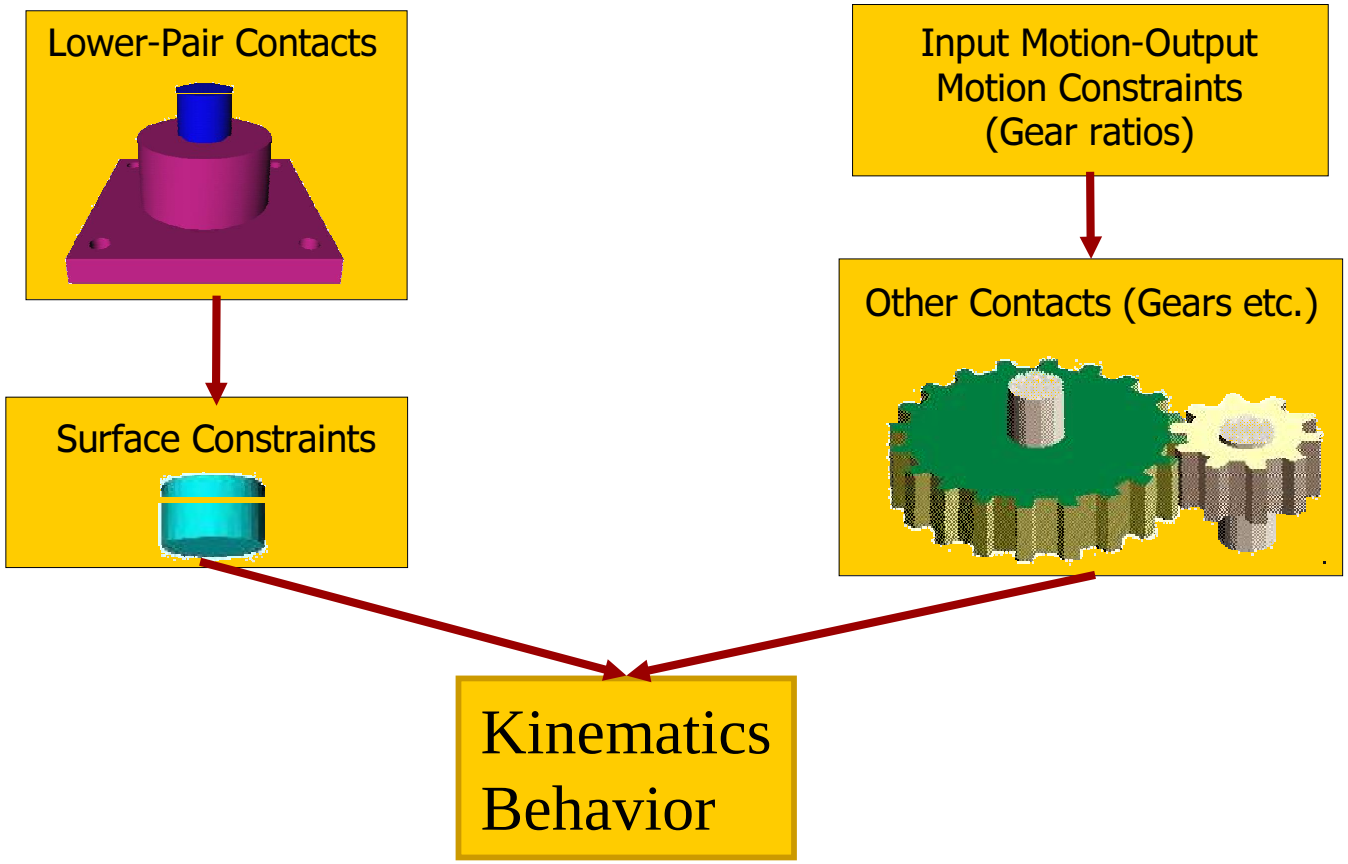

Analysis of Surface Constraints

Motion between 2 parts can cause sliding or separation

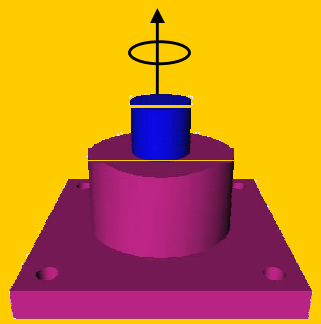

Generalized velocity vector must have component in direction of surface normal vector

$$(\vec{v} + \vec{\omega} \times \vec{r}) \bullet \vec{n} \geq 0$$

Extracting Interaction Models for Lower Pairs

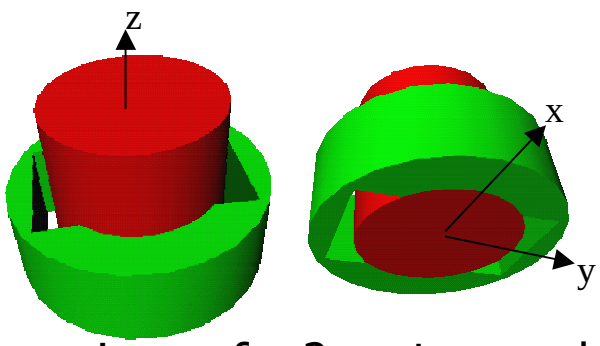

Two views of a 2 part assembly

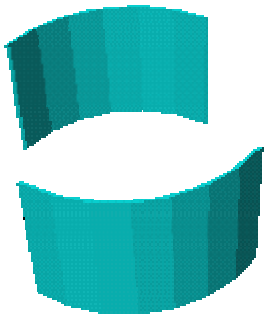

Partial cylindrical contact with 8 points

$$\begin{bmatrix} -0.5\sqrt{2} & 0.5\sqrt{2} & 0 & 0 \\ -0.5\sqrt{2} & 0.5\sqrt{2} & -5\sqrt{2} & -5\sqrt{2} \\ -0.5\sqrt{2} & -0.5\sqrt{2} & 0 & 0 \\ -0.5\sqrt{2} & -0.5\sqrt{2} & 5\sqrt{2} & -5\sqrt{2} \\ 0.5\sqrt{2} & 0.5\sqrt{2} & -5\sqrt{2} & 5\sqrt{2} \\ 0.5\sqrt{2} & 0.5\sqrt{2} & 0 & 0 \\ 0.5\sqrt{2} & -0.5\sqrt{2} & 5\sqrt{2} & 5\sqrt{2} \\ 0.5\sqrt{2} & -0.5\sqrt{2} & 0 & 0 \end{bmatrix} \begin{bmatrix} v_x \\ v_y \\ \omega_x \\ \omega_y \end{bmatrix} \leq 0$$

$$v_x = v_y = \omega_x = \omega_y = 0$$

$$v_z, \omega_z \text{ unconstrained}$$

```
{ Assembly
  # List of parts forming the assembly
  { Part
    { Name cyl } { URL cyl.part }
    { Transform Identity }}
  { Part
    { Name sock }{ URL sock.part }
    { Transform Identity }}
  # List of joints between parts
  { Joint Cylindrical
    { Name cyl_sock}
    { BasePart sock }
    { AttachedPart cyl }
    { JointFeatures
      { Axis cyl 0 0 0 0 0 1 1 0 0 }
      { Axis sock 0 0 0 0 0 1 1 0 0 }
    }
    { Articulations { Theta 0 0 360 }
                    { X 0 -5 5 }}}
}
```

Analysis of the motion matrix

Matrix Representation of Allowed Motions

$$A\begin{bmatrix}\vec{v}\\ \vec{\omega}\end{bmatrix} \geq \vec{0}$$

$$A = \begin{bmatrix} 0 & 0 & 1 & 60 & \cdots & 0 \\ 0 & 0 & 1 & 61.9867 & \cdots & 0 \\ 0 & 0 & 1 & 63.8942 & \cdots & 0 \\ 0 & 0 & 1 & 65.6464 & \cdots & 0 \\ \vdots & \vdots & \vdots & \vdots & \ddots & \vdots \\ -0.5 & 0.866025 & 0 & -160.215 & \cdots & 159.904 \end{bmatrix}_{1854\times 18}$$

Contact-preserving Motions
(nullspace basis)

Contact-breaking Motions

Summary: Composable Simulation

- Form + Behavior = Component Objects
- Interleave Design and Behavioral Modeling
- Extract Model Data (and possibly type) from CAD